REVIEWED FOR CODE COMPLIANCE

DATE 08/19/22 by: [signature] Building Official

PERMIT NO. BLD2022-17276

ADDRESS 9344 NARCOOSSEE RD Orlando FL

CONTRACTOR SHREY PATEL

NOTE: Permit issuance does not grant permission to violate applicable codes
Keep this plan on site at all times

CITY OF ORLANDO
PERMITTING SERVICES DIVISION

## ELECTRICAL SYMBOL LEGEND

(ALL SYMBOLS SHOWN ARE NOT NECESSARILY USED ON THE DRAWINGS)

### LIGHTING FIXTURES

SUBSCRIPTS: A–1b = PANEL A, CIRCUIT 1, SWITCH b
(REFER TO LIGHTING SCHEDULE)

- FLUORESCENT STRIP, OR INDUSTRIAL FIXTURE
- 2' X 4' FLOURESCENT LIGHT FIXTURE. (NL = NIGHT LIGHT).
- 2' X 4' FLUORESCENT LIGHT FIXTURE WITH INTEGRAL EMERGENCY BATTERY TYPE BALLAST "NL" INDICATES FIXTURE IS ON A NIGHT LIGHT CIRCUIT AND IS NOT SWITCHED.
- 2' X 2' FLOURESCENT LIGHT FIXTURE. (NL = NIGHT LIGHT).
- 2' X 2' FLUORESCENT LIGHT FIXTURE WITH INTEGRAL EMERGENCY BATTERY TYPE BALLAST "NL" INDICATES FIXTURE IS ON A NIGHT LIGHT CIRCUIT AND IS NOT SWITCHED.
- COMPACT FLUORESCENT, INCANDESCENT AND HID CEILING LIGHT/DOWN LIGHT
- EMERGENCY OR NIGHTLIGHT (NL) COMPACT FLUORESCENT, INCADESCENT AND HID CEILING LIGHT/DOWN LIGHT
- WALL MOUNTED COMPACT FLUORESCENT, INCADESCENT AND HID FIXTURE
- TRACK LIGHT. PLAN INDICATES LENGTH OF TRACK
- EXIT LIGHT WITH DIRECTIONAL ARROWS AS INDICATED SHADING INDICATES FACE(S) OF FIXTURE. STEM INDICATES WALL MOUNTED 84"AFF UON
- EMERGENCY BATTERY OPERATED WALL PACK WITH 2 AIMABLE HEADS
- WALL MOUNTED FULL–CUTOFF FIXTURE
- OS CEILING MOUNTED DUAL TECHNOLOGY OCCUPANCY SENSOR LUTRON LOS–CDT SERIES.
- SINGLE POLE SWITCH

### CONDUIT AND RACEWAYS

- LP1–2,4,6 HOMERUN, LP1 = PANEL DESIGNATION 2,4,6 = CIRCUITS
- CONDUIT
- CONDUIT CAPPED
- CONDUIT CONTINUES

### COMMUNICATIONS

- DATA/COMM OUTLET WITH FLUSH MOUNTED 4–11/16" SQUARE SINGLE GANG JUNCTION BOX. PROVIDE BLANK BUILDING STANDARD COVER PLATE. EXTEND 1" CONCEALED CONDUIT TO ABOVE ACCESSIBLE CEILING AND STUB–OUT WITH PLASTIC BUSHING. OR AS NOTED. INSTALL PULL WIRE.
- TV TELEVISION COAXIAL OUTLET WITH FLUSH MOUNTED 4–11/16" SQUARE SINGLE GANG JUNCTION BOX. PROVIDE BLANK BUILDING STANDARD COVER PLATE. EXTEND 1" CONCEALED CONDUIT TO ABOVE ACCESSIBLE CEILING AND STUB–OUT WITH PLASTIC BUSHING, OR AS NOTED. INSTALL PULL WIRE.
- COMM OUTLET WITH FLUSH MOUNTED 4–11/16" SQUARE SINGLE GANG JUNCTION BOX. PROVIDE BLANK BUILDING STANDARD COVER PLATE. EXTEND 1" CONCEALED CONDUIT TO ABOVE ACCESSIBLE CEILING AND STUB–OUT WITH PLASTIC BUSHING. OR AS NOTED. INSTALL PULL WIRE.

### WIRING DEVICES

EWC = ELECTRIC WATER COOLER
WP = WEATHERPROOF
GFI = GROUND FAULT INTERRUPTER
EX = EXPLOSION PROOF
IG = ISOLATED GROUND

- DUPLEX CONVENIENCE OUTLET MOUNTED 18" AFF UON. BOX INDICATES FLUSH IN FLOOR
- QUAD (DOUBLE DUPLEX) OUTLET MOUNTED 18" AFF UON. BOX INDICATES FLUSH IN FLOOR
- SPECIAL PURPOSE OUTLET. VOLTAGE, AMPERAGE AND MOUNTING ELEVATION AS NOTED ON PLANS BOX INDICATES FLUSH IN FLOOR
- DUPLEX/QUAD OUTLET MOUNTED HORIZONTALLY ABOVE COUNTERTOP OR BACKSPLASH 44" AFF UON
- SWITCHED DUPLEX OUTLET MOUNTED 18" AFF UON
- JUNCTION BOX, FLUSH MOUNTED IN CEILING UON BOX INDICATES IN FLOOR STEM INDICATES WALL MOUNTED
- PULL BOX, FLUSH MOUNTED IN CEILING UON BOX INDICATES IN FLOOR STEM INDICATES WALL MOUNTED
- LOS, PUSHBUTTON, DOORBELL BUZZER, OR SHUNT TRIP MOUNTED 42" AFF UON
- TC TIME CLOCK

### EQUIPMENT

- 30 NON–FUSED DISCONNECT: 30 = AMPERE SIZE
- 30 FUSED DISCONNECT
- M MOTOR
- ELECTRICAL PANEL BOARD
- TELEPHONE PANEL BOARD
- TVSS TRANSIENT VOLTAGE SURGE SUPPRESSOR (TYPE AS NOTED)
- FACP FIRE ALARM CONTROL PANEL (SIMPLEX 4010 ADDRESSABLE)
- FAAP FIRE ALARM ANNUNCIATOR PANEL (SIMPLEX 4606 SERIES)
- F MANUAL PULLSTATION. 44" AFF UON
- F ADA FIRE ALARM AUDIBLE/VISUAL INDICATOR MOUNTED AT 80" AFF UON
- S SMOKE DETECTOR: I = IONIZATION, P = PHOTOELECTRIC
- F STROBE ONLY, 75 Db
- H CEILING HEAT DETECTOR
- D DUCT DETECTOR (SIMPLEX 4098 SERIES)
- R CONTROL RELAY (SIMPLEX SERIES 2088)
- E ELEVATOR WARNING LIGHT

## ABREVIATIONS

A – AMPERES
A/C – AIR CONDITIONING
AC – ALTERNATING CURRENT
AFF – ABOVE FINISHED FLOOR
AFG – ABOVE FINISHED GRADE
AHU – AIR HANDLING UNIT
AWG – AMERICAN WIRE GAUGE
C – CONDUIT
CFL – COMPACT FLUORESCENT LAMP
CH – COUNTER HEIGHT
CONC – CONCRETE
COND – CONDUIT
CU – COPPER
DISC – DISCONNECT
ECB – ENCLOSED CIRCUIT BREAKER
ELEC – ELECTRICAL
EM – EMERGENCY
EMS – ENERGY MANAGEMENT SYSTEM
EMT – ELECTRICAL METALLIC TUBING
EF – EXHAUST FAN
EWC – ELECTRIC WATER COOLER
ETR – EXISTING TO REMAIN
EX – EXISTING
FA – FIRE ALARM
FACP – FIRE ALARM CONTROL PANEL
FPL – FLORIDA POWER AND LIGHT
G – GROUND
GFI – GROUND FAULT INTERRUPTER
GND – GROUND
GRC – GALVANIZED RIGID CONDUIT
HVAC – HEATING, VENTILATING AND AIR CONDITIONING
H.I.D. – HIGH INTENSITY DISCHARGE
I.G. – ISOLATED GROUND
J – JUNCTION
KAIC – (THOUSAND) AMPERE INTERRUPTING CAPACITY
KVA – KILOVOLT–AMPERES
KW – KILOWATT
LED – LIGHT EMITTING DIODE
LTG – LIGHTING
KCMIL – THOUSANDS OF CIRCULAR MILS
MCU – MASTER CONTROL UNIT
MCP – MOTOR CIRCUIT PROTECTION
MH – METAL HALIDE
N – NEUTRAL
NA – NOT APPLICABLE
NF – NON–FUSED
NL – NIGHT LIGHT
NEC – NATIONAL ELECTRICAL CODE
NIC – NOT IN CONTRACT
NL – NIGHT LIGHT
NEMA – NATIONAL ELECTRICAL MANUFACTURERS ASSOC.
NFPA – NATIONAL FIRE PROTECTION ASSOC.
O.C. – ON CENTER
P – POLE
PNL – PANELBOARD
PVC – POLYVINYL CHLORIDE
RM – ROOM
RGS – RIGID GALVANIZED STEEL
SPEC – SPECIFICATION
SS – STAINLESS STEEL
TBD – TO BE DETERMINED
TVSS – TRANSIENT VOLTAGE SURGE SUPPRESSION
TYP – TYPICAL
UON – UNLESS OTHERWISE NOTED
V – VOLTS
W – WIRE
W – WATT
WP – WEATHERPROOF

## TYP ROOM WITH OCCUPANCY SENSOR

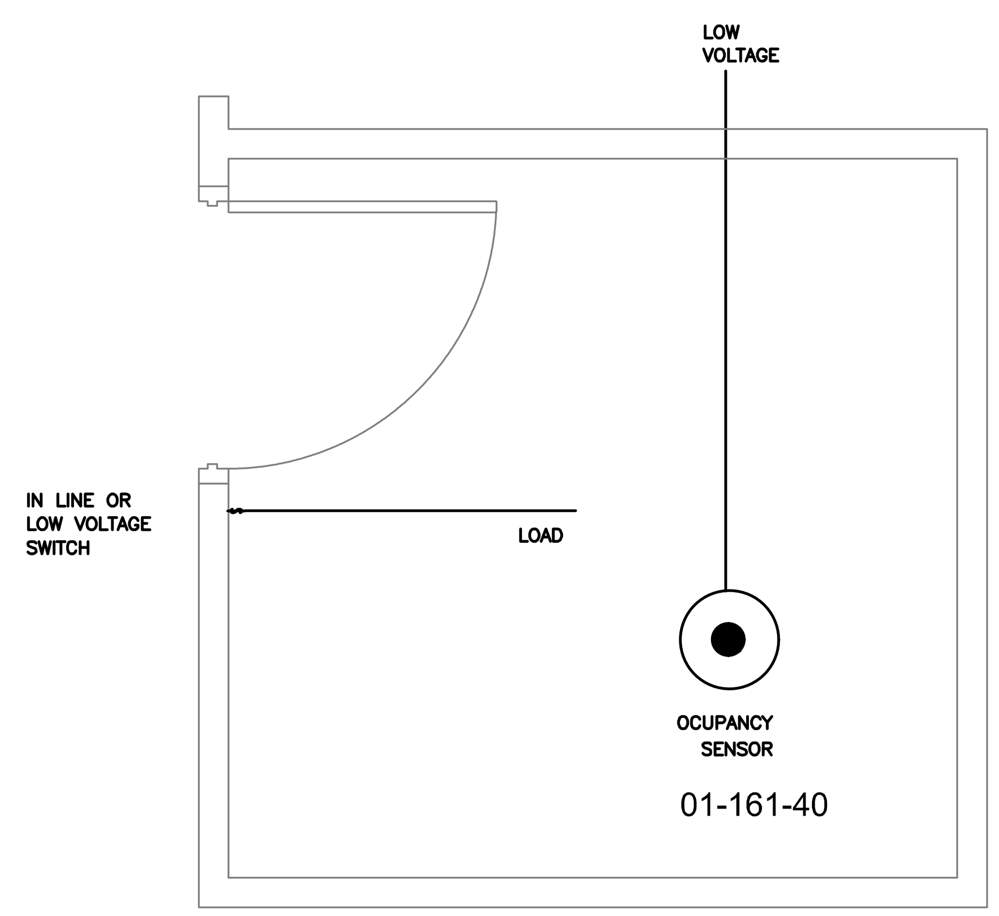


## VOICE / DATA WIRING SCHEMATIC

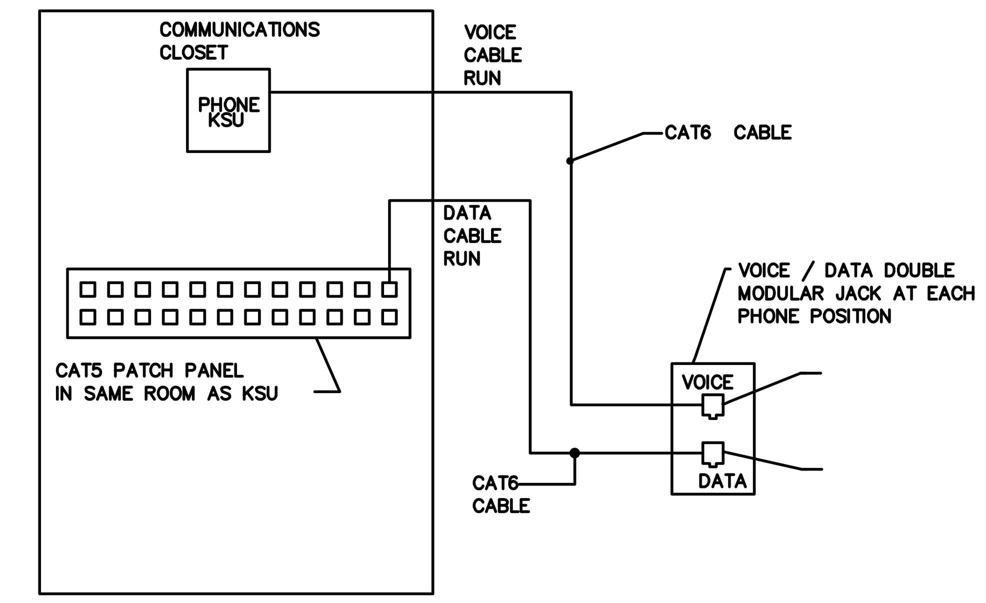


NOTES:
1 – ALL COMPONENTS PROVIDED BY PHONE VENDOR
2 – ALL JACKS TO BE LABELED VOICE AND/OR DATA
3 – ALL JACKS TO BE NUMBERED TO CORRESPOND WITH PATCH PANEL
4 – PLENUM RATED CABLE TO BE USED AS REQUIRED BY CODE
5 – INSTALL 3/4" CONDUIT FROM THE BOX TO AREA ABOVE THE CEILING.

## MECH. EQUIPMENT POWER RISER DETAIL

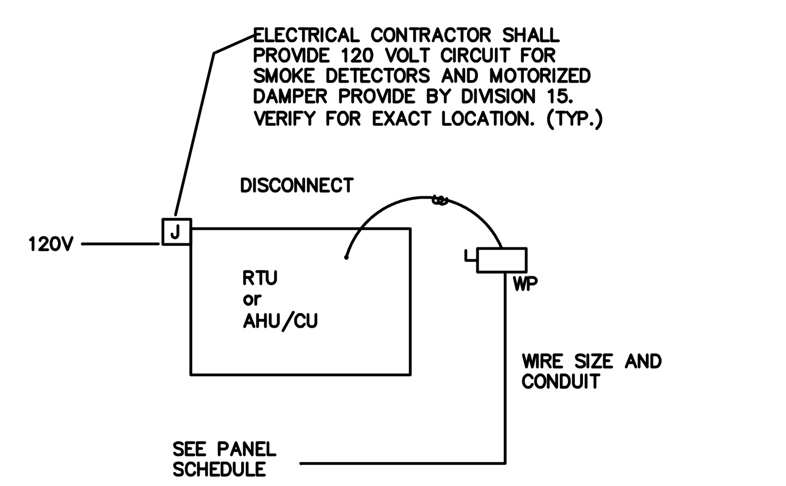


| TYPE | TONS | DISC. | WIRE | GROUND | CONDUIT |
|---|---|---|---|---|---|
| RTU or AHU/CU | 5.0 | 60/3/60 D.E. | 3#6 | 1#8 | 1" |
| | | | | | |

NOTES:

1. VERIFY NAMEPLATE RATINGS, LOCATIONS, AND POINT OF POWER CONNECTIONS PRIOR TO ROUGH–IN.
2. DO NOT LOCATE DISCONNECT SWITCHES OVER UNIT ACCESS PANELS.
3. PROVIDE A 3/4" EMPTY CONDUIT THROUGH INACCESSIBLE LOCATIONS(I.E. WALLS, UNDER SLAB) FOR CONTROL WIRING. COORDINATE WITH MECHANICAL PLANS.
4. EQUIP. REQUIREMENTS ARE FOR MANUFACTURE AND MODEL NUMBER LISTED ON MECHANICAL PLANS. THE MECH. CONTRACTOR SHALL BARE ANY ADDITIONAL COST.

## LIGHTING CONTROL DIAGRAM

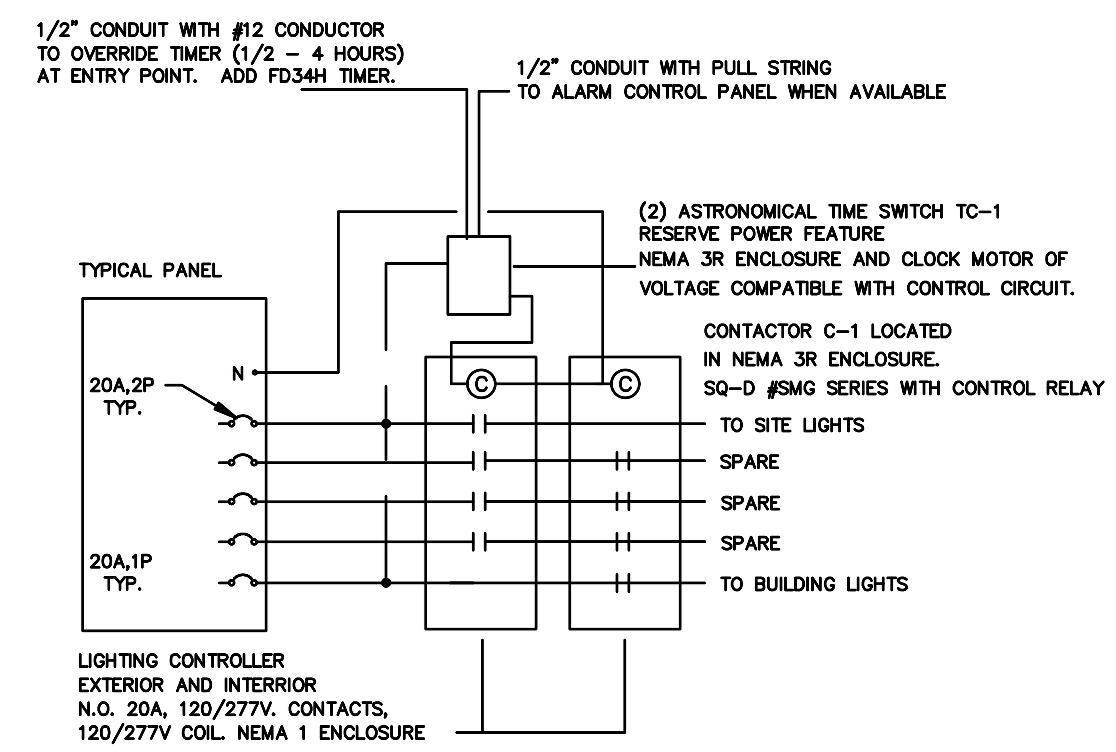


NOTE:
CONTROL DEVICE TO BE INSTALL THAT AUTOMATICALLY TURNS LIGHTING OFF WITHIN 30 MINUTES OF ALL OCCUPANTS LEAVING THE SPACE, EXCEPT SPACES WITH MULTISCENE CONTROL IN CLASS ROOMS, CONFERENCE ROOMS, AND EMPLOYEE LUNCH/BREAK ROOMS.

## OCCUPANCY SENSOR AND EMERGENCY BALLAST DETAILS

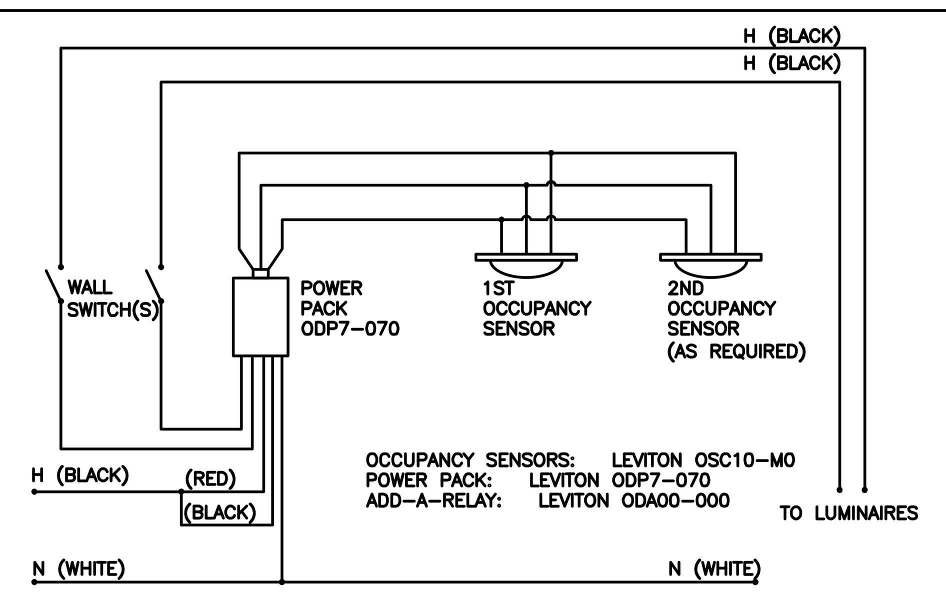


### CEILING OCCUPANCY SENSOR DETAIL

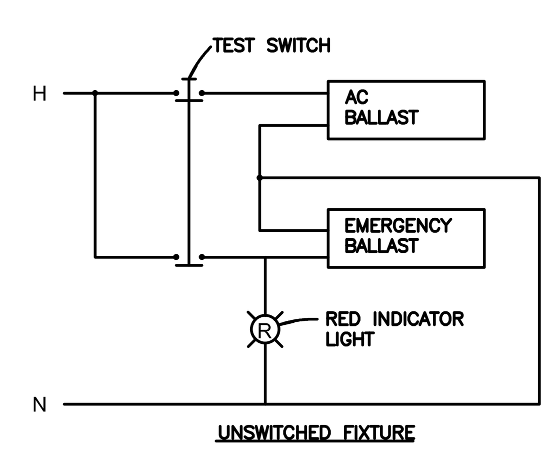


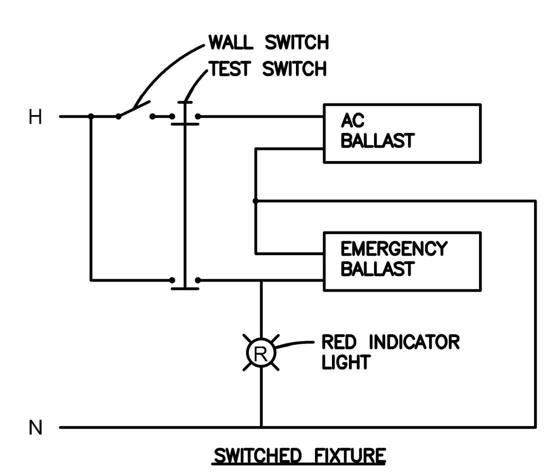


### EMERGENCY BALLAST DETAILS

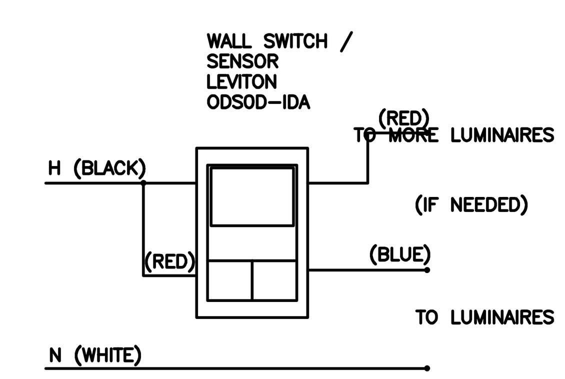


### WALL SENSOR DETAIL


ARCHITECT of record:
Rafael Arbone Architecture
Rafael A Carbone Architect
License # 94894
rcarchitecture2022@outlook.com
CONTACT: cell 407.375.0209


SEAL:
EUGENIO E. DE ALBA LICENSE No. 64611 STATE OF FLORIDA PROFESSIONAL ENGINEER
Eugenio E De Alba
Digitally signed by Eugenio E De Alba
Date: 2022.06.28 10:09:00-04'00'

PROJECT:
PISCO
PERUVIAN GASTROBAR
9344 N. NARCOOSSEE RD
ORLANDO, FLORIDA 32827

REVISIONS:

| REV | DATE | REMARKS |
|---|---|---|
| | | |

PROJECT NO: 2022.001
ISSUE DATE: 06/27/2022
drawn by: RC checked by: RC

SHEET TITLE:
ELECTRICAL DETAILS & NOTES

E4.0

SHEET no.